| REV. | ECN NO. | DATE | SIGN | DESCRIPTION |
|---|---|---|---|---|
| C | C210561 | 2021/04/09 | Vicky | C X4 |
| D | C221877 | 2022/12/09 | Ruru | D X1 |
| E | C240900 | 2024/07/30 | Yunchen | E X1 |

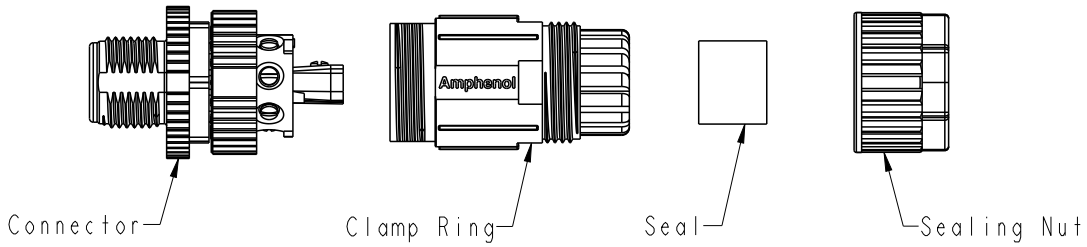


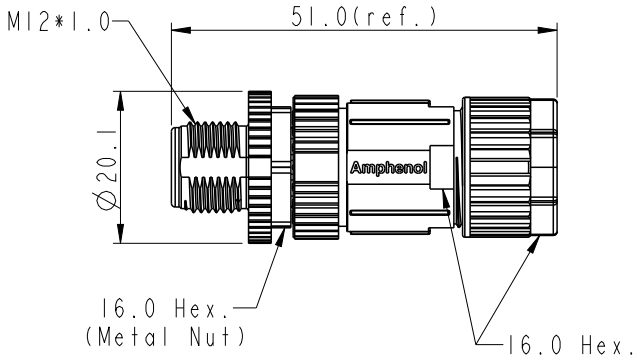


C M12A-XXBMMB-SL7001

XX: No. Of Pin

B C
Note:
* RoHS Compliant
* QC Important Dimension
D * Waterproof rate: IP67, mated
* Connector
  Housing: Thermoplastic, Black
  Pin: Copper alloy, Gold plated
  Extension Nut: Thermoplastic, Black
  Nut: Metal
  O-Ring: Rubber, Gray
* Clamp Ring: Thermoplastic, Black
* Sealing Nut: Thermoplastic, Black
* Seal: Rubber, Gray, OD:Ø4.0mm~Ø8.0mm
* One set unassembled in one pe bag

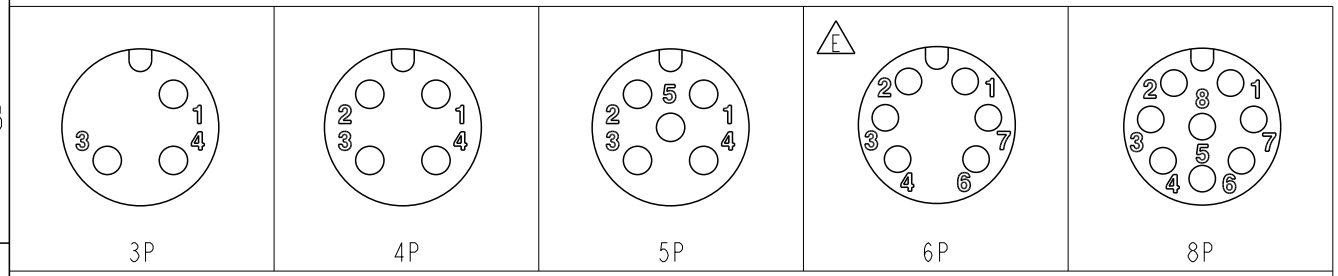


Pin Assignments Front View

UNIT: mm

TOLERANCE
C
.X ±0.25
.XX ±0.1
.XXX ±0.05
ANGLES ±1°

TITLE: N SEN, M12 A, SCREW CABLE W/O SR, M, M, F1 SCREWIN C

SCALE 1:1 | SIZE A4 | SHEET 1 OF 1

REV. E | WC-REV. A.4 | QC: Inspection item

Amphenol LTW
安費諾亮泰企業股份有限公司

| | | |
|---|---|---|
| ITEM NO | DRAWN BY Yunchen | DATE 2024/07/30 |
| DWG NO M12A-XXBMMB-SL7001 | CHECKED BY Aric | DATE 2024/07/30 |
| CUSTOMER ALTW | APPROVED BY Fred | DATE 2024/07/30 |

W10814-03-[redacted]01A2

THIS DOCUMENT IS SUBJECT TO CHANGE WITHOUT NOTICE. IT IS CONFIDENTIAL AND A PROPERTY OF Amphenol LTW. DISCLOSURE TO THIRD PARTY HAS TO BE AUTHORIZED BY Amphenol LTW.